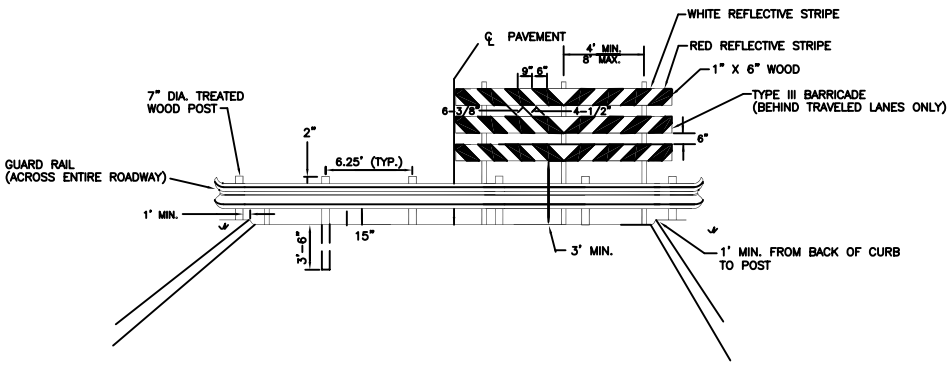

DEAD END BARRICADE STANDARD
UNDIVIDED ROADWAY

NTS

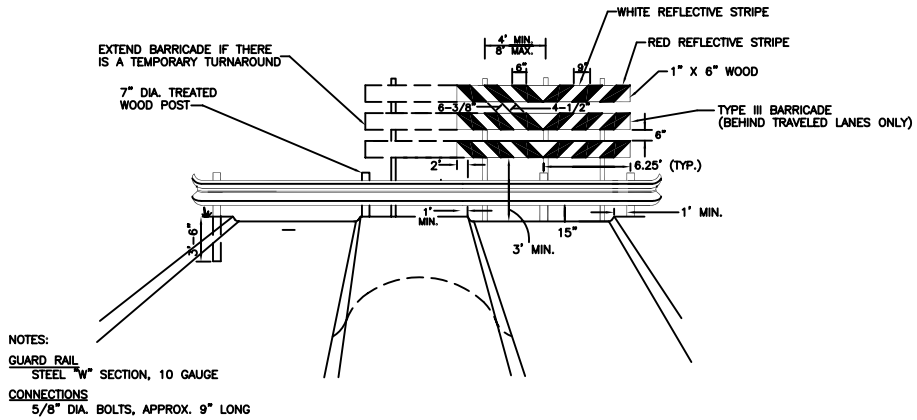

NOTES:

GUARD RAIL
STEEL "W" SECTION, 10 GAUGE

CONNECTIONS
5/8" DIA. BOLTS, APPROX. 9" LONG

DEAD END BARRICADE STANDARD
DIVIDED ROADWAY

NTS

X:\Engineering\Typical Details\Final Details\PAVING\BARRICADE\BARRICADE.dwg, 10/14/2003 02:44:05 PM

REVISIONS		
REVISIONS		
CITY OF ARLINGTON,TEXAS		
PROJECT NUMBER PROJECT NAME (PROJECT LIMITS)		
DATE:	SCALE:	SHEET ___ OF ___
DESIGNED BY:	DRAWN BY:	CHECKED BY: