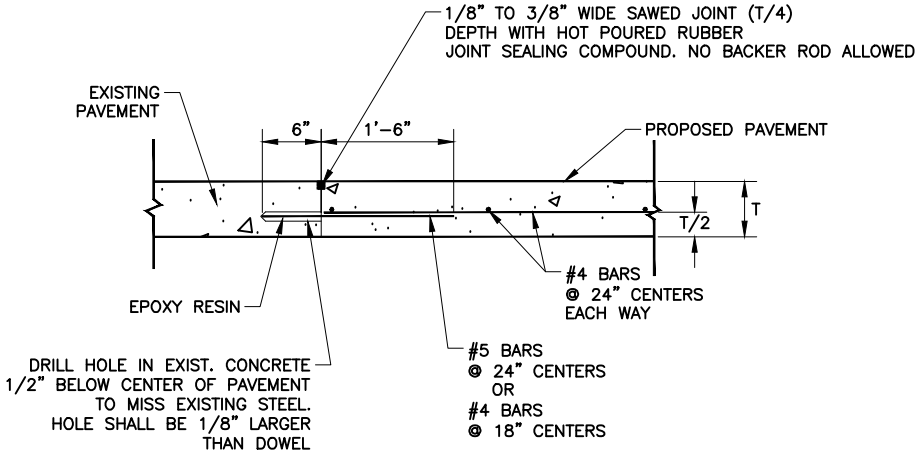

EPOXY TIE BAR – BUTT JOINT

NTS

CITY OF ARLINGTON,TEXAS		
EPOXY TIE BAR – BUTT JOINT		
DATE:	SCALE: NTS	SHEET____OF_____
DESIGNED BY:	DRAWN BY:	CHECKED BY: