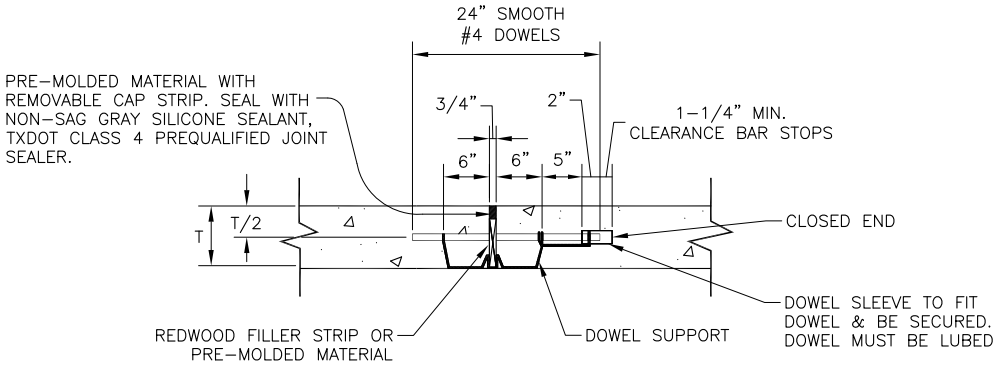

NOTES:

1. SPACING SHALL BE 12" CENTERS.
2. SIDEWALK REINFORCING STEEL NOT SHOWN FOR CLARITY AND SHALL STOP 3" FROM JOINT.

SIDEWALK TRANSVERSE EXPANSION JOINT

NTS

CITY OF ARLINGTON,TEXAS		
SIDEWALK TRANSVERSE EXPANSION JOINT		
DATE:	SCALE: NTS	SHEET_____OF_____
DESIGNED BY:	DRAWN BY:	CHECKED BY: