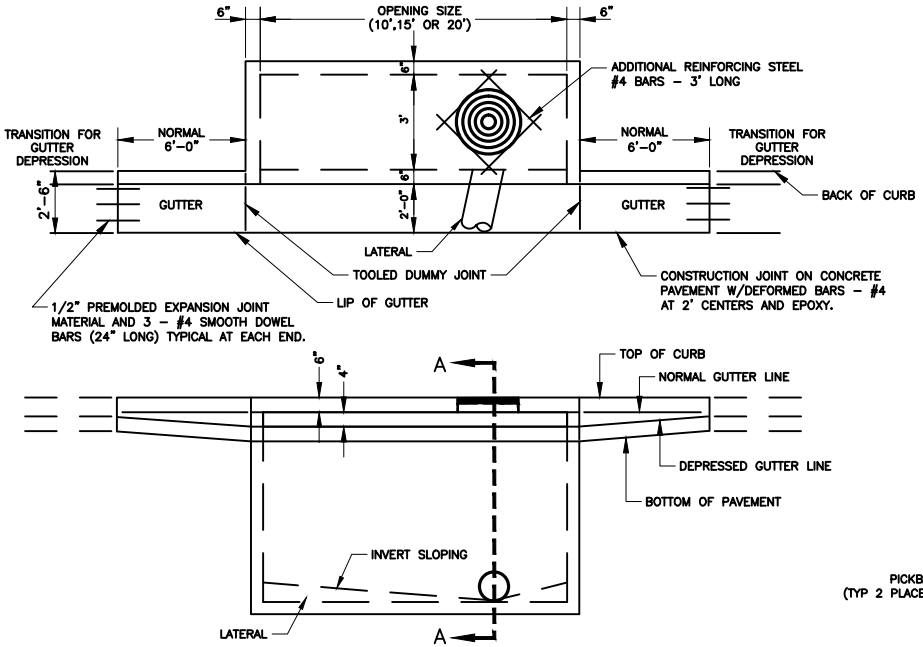

CURB INLET

N.T.S

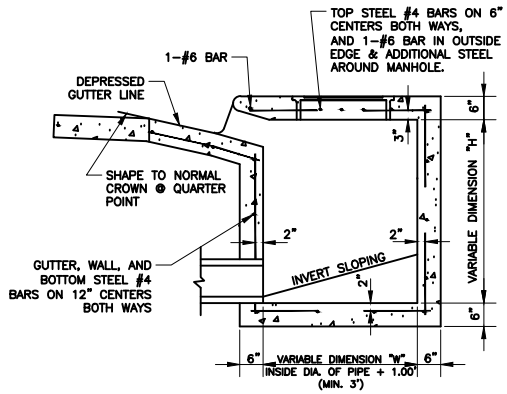

SECTION A–A
CURB INLET
CROSS SECTION

N.T.S

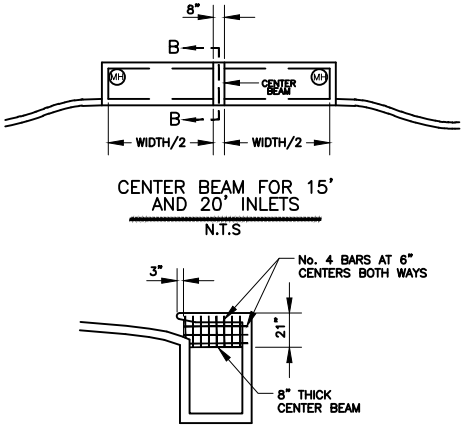

CENTER BEAM FOR 15'
AND 20' INLETS

N.T.S

SECTION B–B

N.T.S

NOTES:

1. ALL 15' AND 20' INLETS WILL REQUIRE A CENTER SUPPORT BEAM.
2. ALL OPEN BACK INLETS WILL REQUIRE A CENTER BEAM, REGARDLESS OF INLET TYPE OR SIZE.

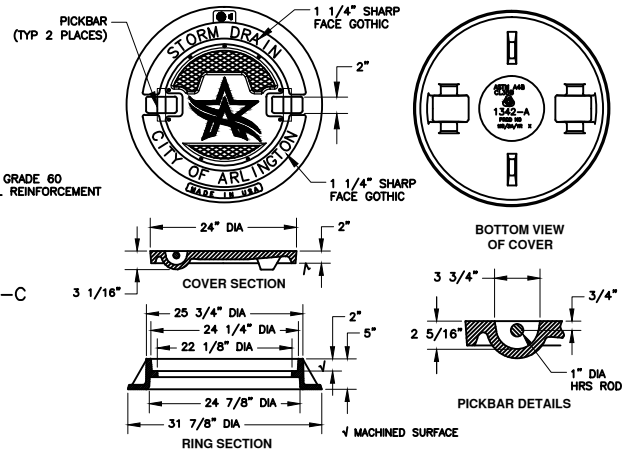

MANUFACTURER	REFERENCE NUMBER	APPROX. WEIGHT
EAST JORDAN	1342–A	310 lb
OR APPROVED EQUAL		

COVER WILL BE NON–LOCKING TYPE. SPOT WELD INLET COVER TO RING IN AT LEAST 4 LOCATIONS TO PREVENT THEFT.

LOGO MANHOLE COVER & FRAME

N.T.S.

GENERAL NOTES:

1. REINFORCING STEEL SHALL BE #4 BARS ON 12" CENTERS BOTH WAYS FOR GUTTER, BOTTOM SLAB, ENDS, FRONT AND BACK WALLS, AND #4 BARS ON 6" CENTERS BOTH WAYS FOR TOP SLAB. AN ADDITIONAL #6 BAR SHALL BE PLACED IN THE FRONT EDGE OF THE TOP SLAB IN THE INLETS AND ADDITIONAL REINFORCING STEEL SHALL BE PLACED AROUND MANHOLES AS SHOWN.
2. ALL REINFORCING STEEL SHALL BE GRADE 60.
3. ALL CONCRETE SHALL BE CLASS "A".
4. ALL EXPOSED CORNERS SHALL BE CHAMFERED 3/4".
5. ALL REINFORCING STEEL SHALL HAVE A MINIMUM COVER OF 2".
6. ALL BACKFILLING SHALL BE PERFORMED BY MECHANICAL TAMPING TO 95% STANDARD PROCTOR DENSITY.
7. IF MODIFYING AN INLET, i.e. CREATING AN OPEN BACK INLET, THE TOP SHALL BE REMOVED AND RECONSTRUCTED.
8. LOCATION OF MANHOLE OPENING TO BE AT OUTFALL END.
9. ALL 15' AND 20' INLETS WILL REQUIRE TWO MANHOLES ONLY IF THE INSIDE HEIGHT (UNDER THE CENTER BEAM) IS LESS THAN FOUR FEET.
10. LIGHT BROOM FINISH ON ALL SURFACES.

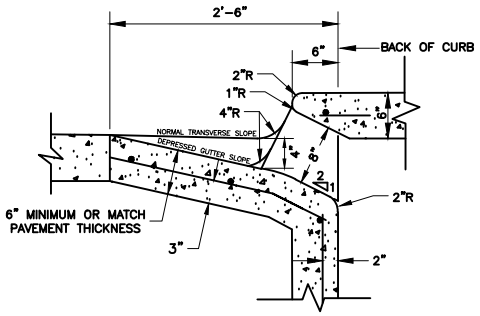

THROAT DETAIL FOR STANDARD INLETS
ON CONCRETE STREETS

NTS

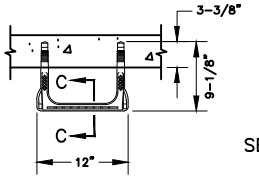

SECTION C–C

NON–CORROSIVE STEPS

N.T.S.

NOTES:

1. STEPS SHALL CONFORM TO ASTM C478–88a.
2. M.A. IND. INC. NUMBER "PS1–PF" STEPS OR AMERICAN STEP CO., NUMBER ML–10 OR APPROVED EQUAL TO BE INSTALLED PER MANUFACTURERS DIRECTION.
3. STEPS ARE REQUIRED FOR ALL INLETS 4' AND DEEPER.
4. STEPS SHALL BE PLACED 12" ON CENTERS VERTICALLY AND STAGGERED 12" ON CENTERS HORIZONTALLY.
5. THE TOP STEP SHALL BE NO GREATER THAN 1' BELOW THE INSIDE OF THE TOP OF THE INLET, AND THE BOTTOM STEP SHALL BE NO HIGHER THAN 2' FROM THE FLOOR.
6. STEPS SHALL BE PLACED ON A WALL WHICH WILL NOT CONFLICT WITH THE PIPE(S) AND SHALL BE EASILY ACCESSIBLE FROM THE MANHOLE OPENING

CITY OF ARLINGTON,TEXAS

STANDARD INLET

DATE:	SCALE: NTS	SHEET____OF____
DESIGNED BY:	DRAWN BY:	CHECKED BY: