DWG CK:	DWG CK:	DWG CK:

SEE DRAWING ESI-09-112-13-ES1 FOR WIRING DIAGRAM

240 V 1 Ø 2 W 100 AMPS

UTILITY _____ 14K AIC

DISTRIBUTOR ELECTROL SYSTEMS

CONTRACTOR _____

PEDESTAL MATERIAL AND FINISH COLOR
- ■ ALUMINUM BLACK
- ☐ STAINLESS STEEL #3 BRUSHED
- ☐ OTHER _____

U.L. LABEL
- ■ SERVICE EQUIPMENT
- ■ INDUSTRIAL CONTROL

PHOTOCELL REQUIRED ■ YES ☐ NO | PHOTOCELL PROVISIONS ■ YES ☐ NO

NEMA 3R CONSTRUCTION- -STAINLESS STEEL HARDWARE
.125 STAINLESS STEEL CONSTRUCTION WITH NATURAL FINISH
OR .125 ALUMINUM CONSTRUCTION WITH POWDER-COAT FINISH

ALL FACTORY WIRING CODE GAUGE COPPER CONDUCTORS WITH 600V INSULATION
SERVICE TERMINATIONS NO. 6 AWG TO 250 MCM CU/AL

MATERIAL LIST

NO	DESCRIPTION	QTY	AMP	POLE	AIC/V	MANUFACTURER AND PART NUMBER	
1-2	MAIN	1	100	2	14K	CUTLER-HAMMER	GHC2100
3	PHOTOCELL CONTROL	1	15	1	14K	CUTLER-HAMMER	GHC1015
4	TIME SWITCH CONTROL	1	15	1	14K	CUTLER-HAMMER	GHC1015
5	LIGHTS 'A'	1	15	1	14K	CUTLER-HAMMER	GHC1015
6	LIGHTS 'B'	1	15	1	14K	CUTLER-HAMMER	GHC1015
7	LIGHTS 'C'	1	15	1	14K	CUTLER-HAMMER	GHC1015
8	LIGHTS 'D'	1	15	1	14K	CUTLER-HAMMER	GHC1015
9	LIGHTS 'E'	1	15	1	14K	CUTLER-HAMMER	GHC1015
10	LIGHTS 'F'	1	15	1	14K	CUTLER-HAMMER	GHC1015
11	LIGHTS 'G'	1	15	1	14K	CUTLER-HAMMER	GHC1015
12	LIGHTS 'H'	1	15	1	14K	CUTLER-HAMMER	GHC1015
PDB	POWER BLOCK	1	175	2	600V	BUSMAN	16220-2
HOA	3 POS. SELECTOR	1	20	-	600V	CUTLER-HAMMER	E22B2
TC	TIME SWITCH	1	20	2	240V	INTERMATIC	ET70215C
PEC	PHOTOELECTRIC SOCKET	2	20	-	600V	INTERMATIC	K122
	PE CELL	1	20	-	240V	ALR	SST-PV-IES-UL
NOTE: PHOTOELECTRIC MAY BE LOCATED ON LEFT OR RIGHT SIDE OF CABINET							
C	CONTACTOR	1	100	2	240V	SQUARE D	8903SQ01V03

NOTE: USE SPECIAL XHHW WIRE!

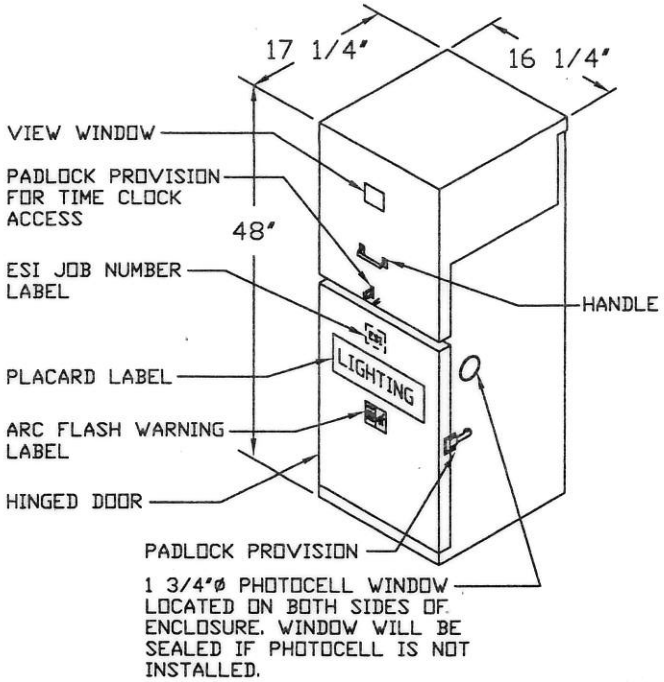

FRONT VIEW

PLEASE REFER ALL INQUIRIES TO OUR SHOP ORDER NUMBER ESI-09-112-ES1

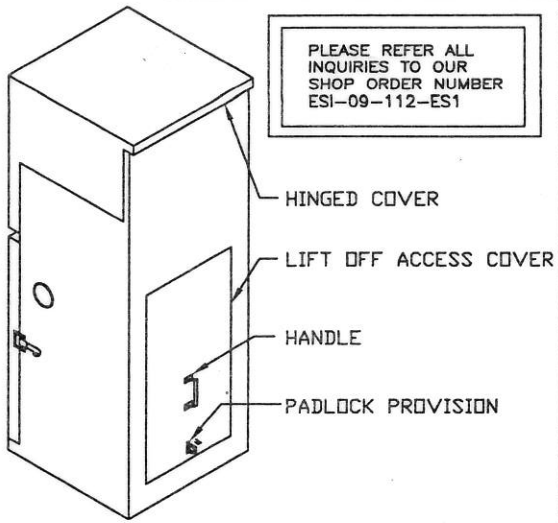

REAR VIEW

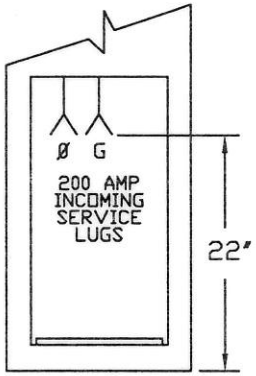

REAR LANDING DETAIL, COVER REMOVED

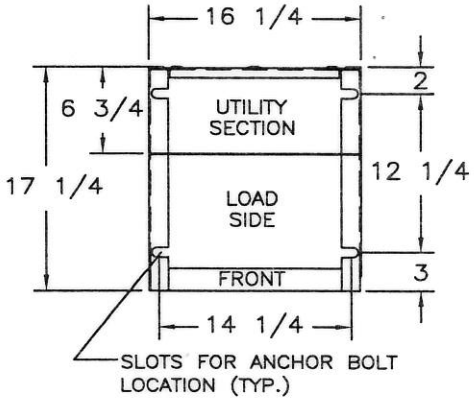

ANCHOR BOLT INSTALLATION LAYOUT BOTTOM VIEW

ELECTRICAL SERVICE DATA: N/A

SERVICE LOCATION:
ROGERS ST. BRIDGE @ ROGERS RD.

CITY OF ARLINGTON, TX.

COUNTY:	TARRANT
PROJECT:	
C.S.J.#	
HIGHWAY:	

E/S THIS DOCUMENT, THE IDEAS, AND DESIGNS, WHICH CONTAIN PROPRIETARY AND CONFIDENTIAL INFORMATION INCORPORATED HEREIN, IS THE PROPERTY OF ELECTROL SYSTEMS, INC. WHICH MUST NOT BE DUPLICATED, USED OR DISCLOSED (IN WHOLE OR IN PART) WITHOUT THE EXPRESSED WRITTEN AUTHORIZATION OF ELECTROL SYSTEMS, INC.

CONTRACTOR: MEL'S ELECTRIC	FILE: M:\DWG002009	REVISION: NO REVISION	REVISION DATE:
DATE: 30 JAN 09 DRAWN BY: MJJ SCALE: NTS	ELECTROL SYSTEMS, INC. 433 RECOLETA SAN ANTONIO, TX 78216 [210] 599-6485	PROJECT: TxDOT TYPE A-SPECIAL - PS TYA-SPL(240)100(NS)AL(E)PS(U)	TITLE: ELECTRICAL SERVICE EXTERIOR DETAIL	REFERENCE # ESI-09-112-11-ES1