*NOMINAL MANUFACTURING TOLERENCES APPLY.

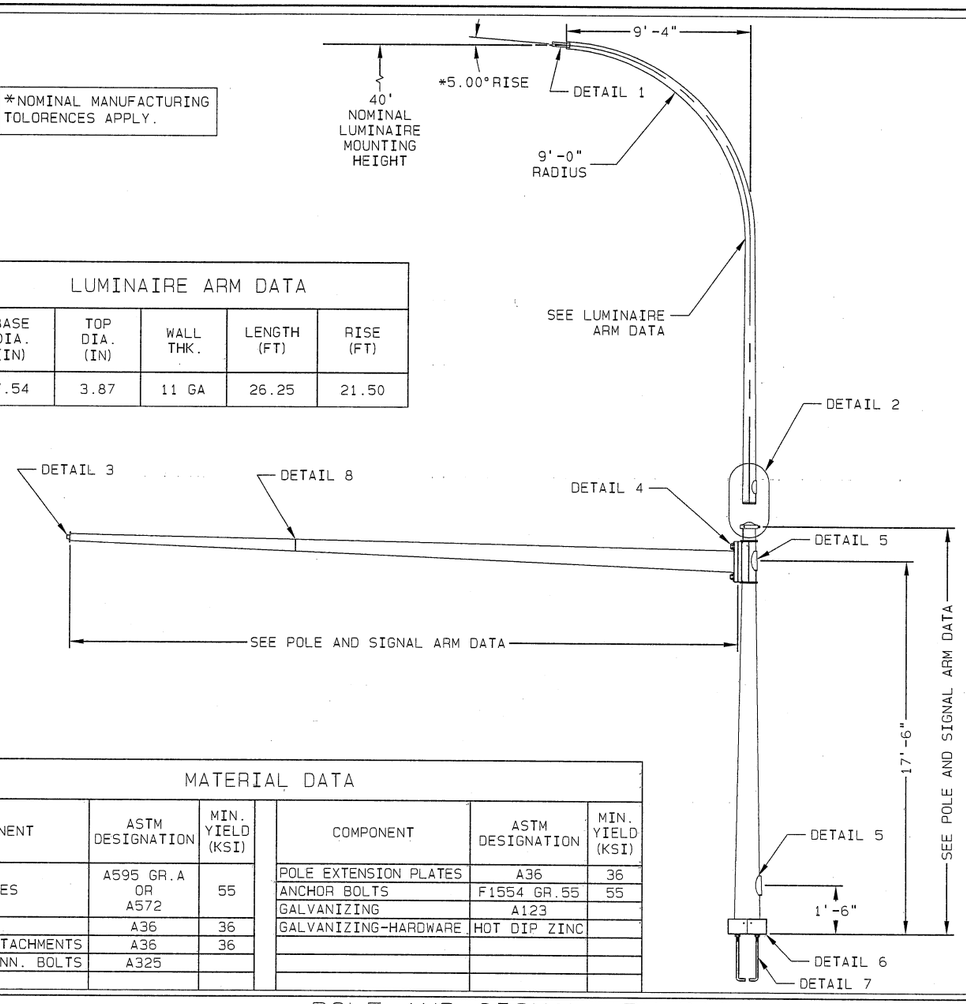

LUMINAIRE ARM DATA

BASE DIA. (IN)	TOP DIA. (IN)	WALL THK.	LENGTH (FT)	RISE (FT)
7.54	3.87	11 GA	26.25	21.50

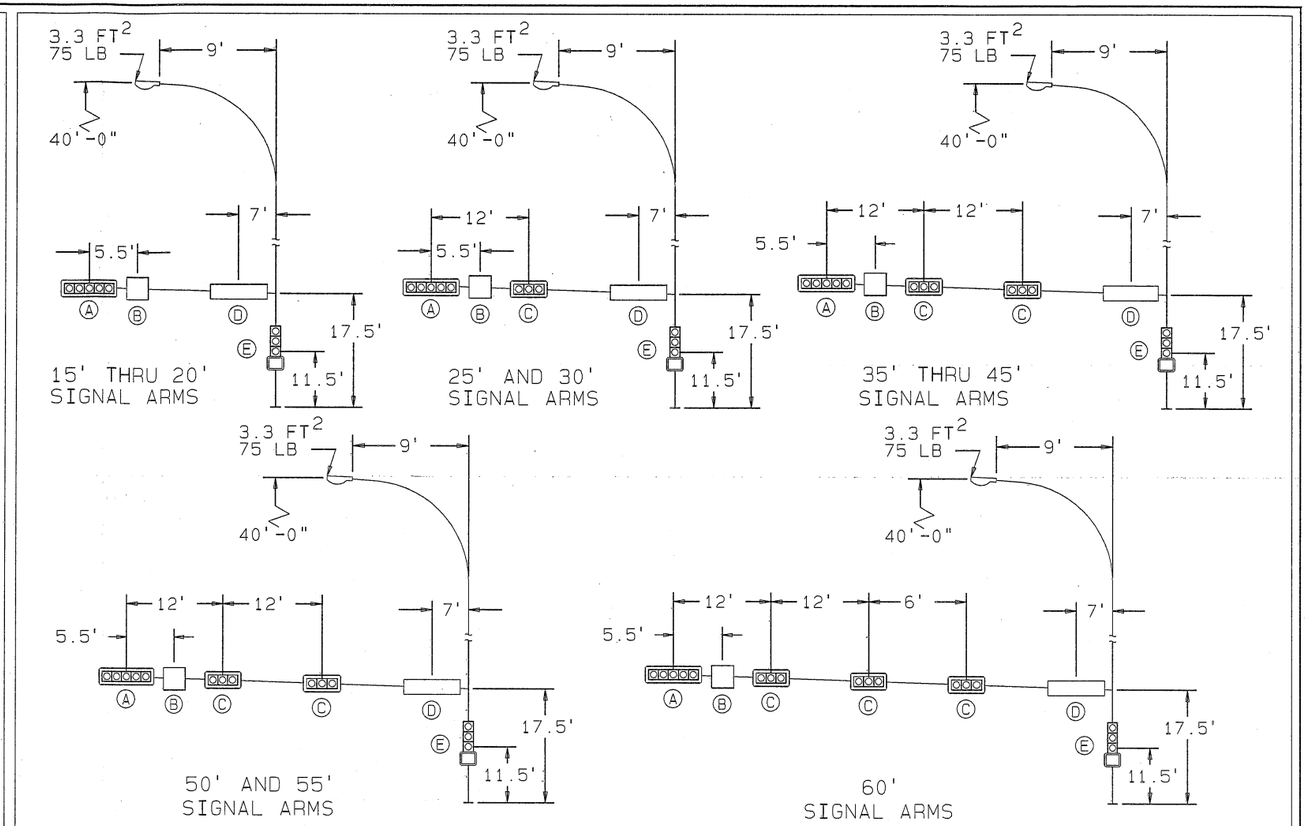

MATERIAL DATA

COMPONENT	ASTM DESIGNATION	MIN. YIELD (KSI)
TAPERED TUBES	A595 GR.A OR A572	55
BASE PLATE	A36	36
MAST ARM ATTACHMENTS	A36	36
MAST ARM CONN. BOLTS	A325	

COMPONENT	ASTM DESIGNATION	MIN. YIELD (KSI)
POLE EXTENSION PLATES	A36	36
ANCHOR BOLTS	F1554 GR.55	55
GALVANIZING	A123	
GALVANIZING-HARDWARE	HOT DIP ZINC	

DEVICE	DESCRIPTION	PROJ. AREA (SQ.FT.)	WEIGHT (LBS.)
(A) SIGNAL	12"-5 SEC. SIGNAL W/BACKPLATES	13.33	83
(B) SIGN	36" X 36" DIRECTIONAL SIGN	9.00	27
(C) SIGNAL	12"-3 SEC. SIGNAL W/BACKPLATES	8.67	53
(D) SIGN	18" X 84" STREET NAME SIGN	10.50	27
(E) SIGN	12"-3 SEC. SIGNAL & PED SIGNALS	9.50	135

MAXIMUM LOADING INFORMATION

ARL-CB-25'-9.33'

- 9'-4" DAVIT EXTENSION IF REQUIRED (N/A IF NOT REQUIRED)
- LENGTH FOR SIGNAL MAST ARM
- POLE TYPE SM/CB (SM=SINGLE MAST ARM POLE WITHOUT DAVIT EXTENSION-CB=SINGLE MAST ARM POLE WITH A 9'-4" DAVIT EXTENSION.)
- ARLINGTON POLE SERIES

DESIGNATION EXAMPLE

POLE AND SIGNAL ARM DATA

DESIGN	POLE TUBE				POLE BASE				ANCHOR BOLT				ARM DATA			
	BASE DIA. (IN)	TOP DIA. (IN)	LENGTH (FT)	GAUGE OR THK. (IN)	SQUARE "S" (IN)	BOLT CIRCLE "Y" (IN)	THK. "M" (IN)	HOLE/SLOT "Z" (IN)	DIA. "K" (IN)	LENGTH "J" (IN)	HOOK "H" (IN)	THREAD LENGTH "U" (IN)	FIXED END DIA. (IN)	FREE END DIA. (IN)	GAUGE OR THICK (IN)	SPAN (FT)
ARL-15	14.50	11.91	18.50	0.219	20.00	19.00	1.50	1.75	1.50	54.00	6.00	8.00	9.00	6.90	7	15.00
ARL-20	14.50	11.91	18.50	0.219	20.00	19.00	1.50	1.75	1.50	54.00	6.00	8.00	9.00	6.20	7	20.00
ARL-25	14.50	11.91	18.50	0.219	20.00	19.00	1.50	1.75	1.50	54.00	6.00	8.00	11.00	7.50	7	25.00
ARL-30	14.50	11.91	18.50	0.219	20.00	19.00	1.50	1.75	1.50	54.00	6.00	8.00	11.00	6.80	7	30.00
ARL-35	14.50	11.91	18.50	0.219	20.00	19.00	1.50	1.75	1.50	54.00	6.00	8.00	11.00	6.10	3	35.00
ARL-40	14.50	11.91	18.50	0.219	20.00	19.00	1.50	1.75	1.50	54.00	6.00	8.00	12.50	6.90	3	40.00
ARL-45	14.50	11.91	18.50	0.219	20.00	19.00	1.50	1.75	1.50	54.00	6.00	8.00	13.50	7.56	DET.8	45.00
ARL-50	14.50	11.91	18.50	0.219	20.00	19.00	1.50	1.75	1.50	54.00	6.00	8.00	13.50	6.86	DET.8	50.00
ARL-55	16.00	13.41	18.50	0.219	22.00	21.00	1.75	2.00	1.75	84.00	6.00	8.00	14.50	7.16	DET.8	55.00
ARL-60	16.00	13.41	18.50	0.219	22.00	21.00	1.75	2.00	1.75	84.00	6.00	8.00	14.50	6.46	DET.8	60.00

DESIGN CRITERIA

THESE TRAFFIC SIGNAL SUPPORT STRUCTURES ARE DESIGNED IN ACCORDANCE WITH LOADING AND ALLOWABLE STRESS REQUIREMENTS OF 2009 AASHTO "STANDARDS SPECIFICATION FOR STRUCTURAL SUPPORTS FOR HIGHWAY SIGNS, LUMINAIRES AND TRAFFIC SIGNALS", FIFTH EDITION. WIND LOADS ARE BASED ON A BASIC WIND SPEED OF 90 MPH ISOTACH WITH A RECURRENCE INTERVAL OF 50 YEARS, AND A FATIGUE CATEGORY OF 2. FATIGUE LOADS ARE BASED ON THE REQUIREMENTS OF SECTION 11.7 AND THE FOLLOWING DESIGN LOADS:

- VORTEX SHEDDING: NOT APPLICABLE FOR STRUCTURES WITH A TAPER OF AT LEAST 0.14"/FT, PER AASHTO.
- NATURAL WIND GUSTS: THE YEARLY MEAN WIND SPEED FOR NATURAL WIND GUSTS WILL BE ASSUMED TO BE 11.2 MPH.
- GALLOPING: STRUCTURES ARE NOT DESIGNED TO RESIST PERIODIC GALLOPING FORCES.
- TRUCK-INDUCED GUST: STRUCTURES ARE NOT DESIGNED TO INCLUDE TRUCK-INDUCED GUSTS.
- ICE LOAD: STRUCTURES ARE DESIGNED TO INCLUDE AASHTO ICE LOADS.

F-4591

STATE OF TEXAS
BARRY N. SLADEK
91283
LICENSED PROFESSIONAL ENGINEER

Barry N. Sladek 2/6/14

REV	DRAWN BY-DATE	CHECK BY-DATE	DESCRIPTION
A	AC19 08/05/13	BDS 08/05/13	UPDATED SIZES PER NEW CALCS
—	AC19 03/07/13	BDS 03/13/13	— — — — — — — — — — — — — — — — — — — —

TITLE CITY OF ARLINGTON, TX.
TRAFFIC SIGNAL STRUCTURES

VALMONT INDUSTRIES, INC. RESERVES THE RIGHT TO INSTALL VARIOUS, ENGINEER APPROVED, MATERIAL HANGING ACCOMMODATIONS TO FACILITATE THE MANUFACTURING PROCESS.

valmont
Valley, NE 68064
(402) 359-2201

DRAWING NUMBER DB01041 REV A

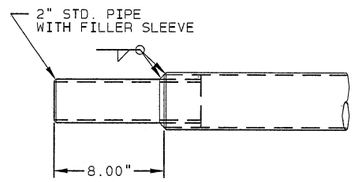

DETAIL 1 | DAVIT ARM END TENON

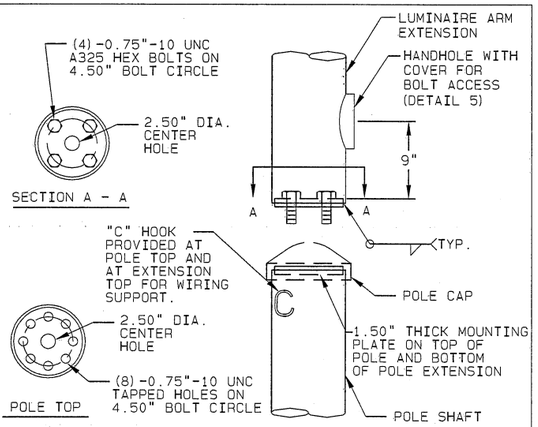

DETAIL 2 | POLE EXTENSION CONNECTION

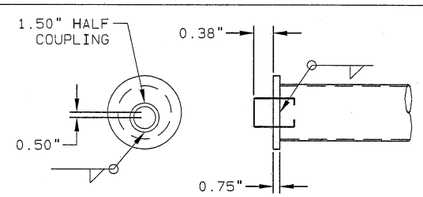

DETAIL 3 | SIGNAL ARM END BRACKET

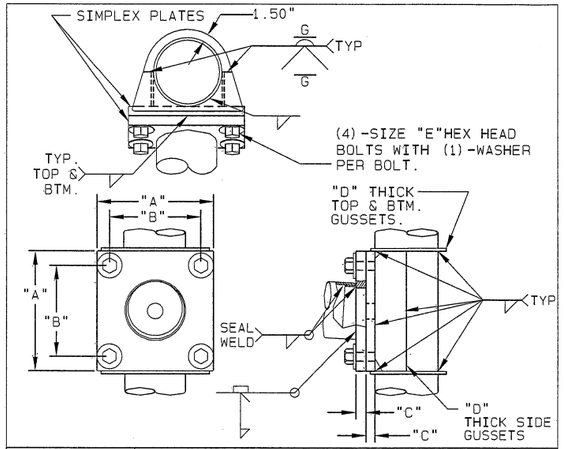

DETAIL 4 | MAST ARM ATTACHMENT

ARM PLATE ATTACHMENT DATA					
POLE BASE DIA. (IN)	"A" (IN)	"B" (IN)	"C" (IN)	"D" (IN)	"E" (IN)
14.50	20.25	17.00	1.75	0.250	1.25 X 3.75
16.00	22.00	18.50	1.75	0.313	1.25 X 3.75

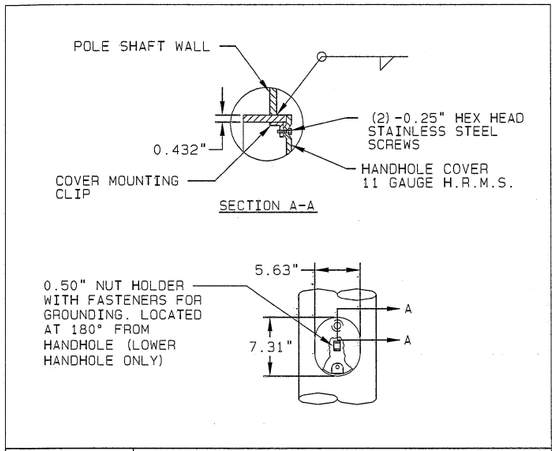

DETAIL 5 | HANDHOLE

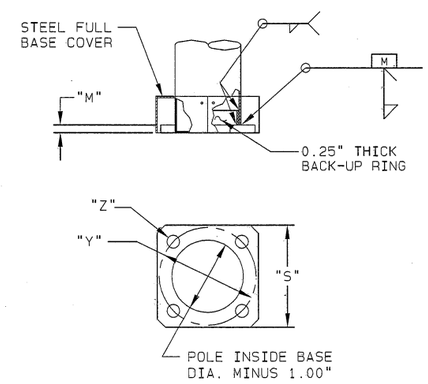

DETAIL 6 | POLE BASE CONNECTION

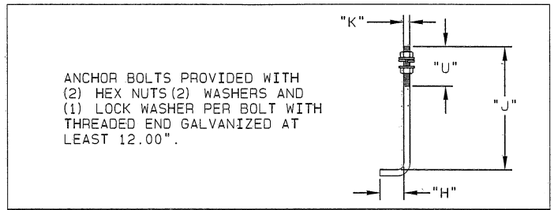

DETAIL 7 | ANCHOR BOLT

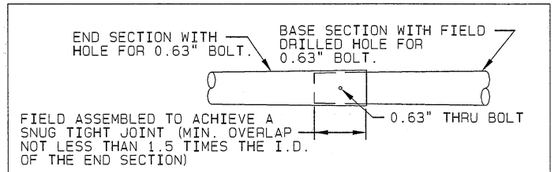

SPAN (FT)	BASE SECTION		END SECTION	
	LENGTH (FT)	GAUGE OR THICK (IN)	LENGTH (FT)	GAUGE
45	15.85	0.313	31.72	7
50	15.85	0.313	36.72	7
55	22.99	0.313	34.58	7
60	22.99	0.313	39.58	7

DETAIL 8 | SIGNAL ARM SLIP JOINT

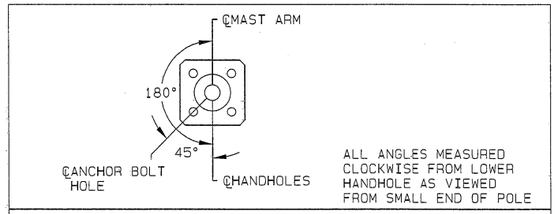

RADIAL INDEX

F-4591

STATE OF TEXAS
BARRY N. SLADEK
91283
LICENSED
PROFESSIONAL ENGINEER

2/6/14

TITLE CITY OF ARLINGTON, TX
TRAFFIC SIGNAL STRUCTURES

VALMONT INDUSTRIES, INC. RESERVES THE RIGHT TO INSTALL VARIOUS, ENGINEER APPROVED, MATERIAL HANGING ACCOMMODATIONS TO FACILITATE THE MANUFACTURING PROCESS.

valmont
Valley, NE 68064
(402) 359-2201

DRAWING NUMBER DB01041 | REV A