NOTES

1. FIRE HYDRANTS SHALL NOT BE INSTALLED IN EXISTING OR PROPOSED SIDEWALKS.
2. ALL PUBLIC FIRE HYDRANTS SHALL BE BRUSH PAINTED (DO NOT SPRAY) WITH 2 COATS OF FLYNT READY MIXED ALUMINUM PAINT OF GREENVILLE, TEXAS 1-800-473-5968 SILVER COLOR ONLY.
3. ALL PRIVATE FIRE HYDRANT BONNETS SHALL BE BRUSH PAINTED (DO NOT SPRAY) WITH RED PAINT.
4. COMPLETELY COVER OUT-OF-SERVICE FIRE HYDRANTS WITH BLACK PLASTIC.
5. INSTALL RESTRAINED OFFSET BENDS OR "GRADELOCK" FITTINGS ON FIRE HYDRANT SUPPLY LINE SO FIRE HYDRANT BURY DEPTH IS NO GREATER THAN SIX FEET.
6. INSTALL GATE VALVE PER FIGURE 1 RESTRAINED AT TEE. (ALL HYDRANT LEADS, REGARDLESS OF SIZE).
7. WHERE SIDEWALKS CANNOT BE AVOIDED, PROVIDE A MINIMUM OF 4' CLEARANCE ON SIDEWALK, A MINIMUM OF 3' TO BACK OF CURB, AND A MINIMUM OF 4' IS REQUIRED FROM DRIVE APPROACH RADIUS.
8. ALL FIRE HYDRANTS SHALL INDICATE MANUFACTURE DATE AND BE MANUFACTURED IN THE SAME YEAR AS INSTALLATION.
9. SERVICES ON FIRE HYDRANT LEADS ARE PROHIBITED.
10. ALL FIRE HYDRANTS SHALL BE SET ON CONC. BLOCK FOOTING SUPPORT PRIOR TO POURING CONCRETE BLOCKING.
11. ALL FIRE HYDRANTS INSTALLED AFTER JANUARY 4, 2014 SHALL BE LEAD FREE ACCORDING TO THE EPA GUIDELINES.

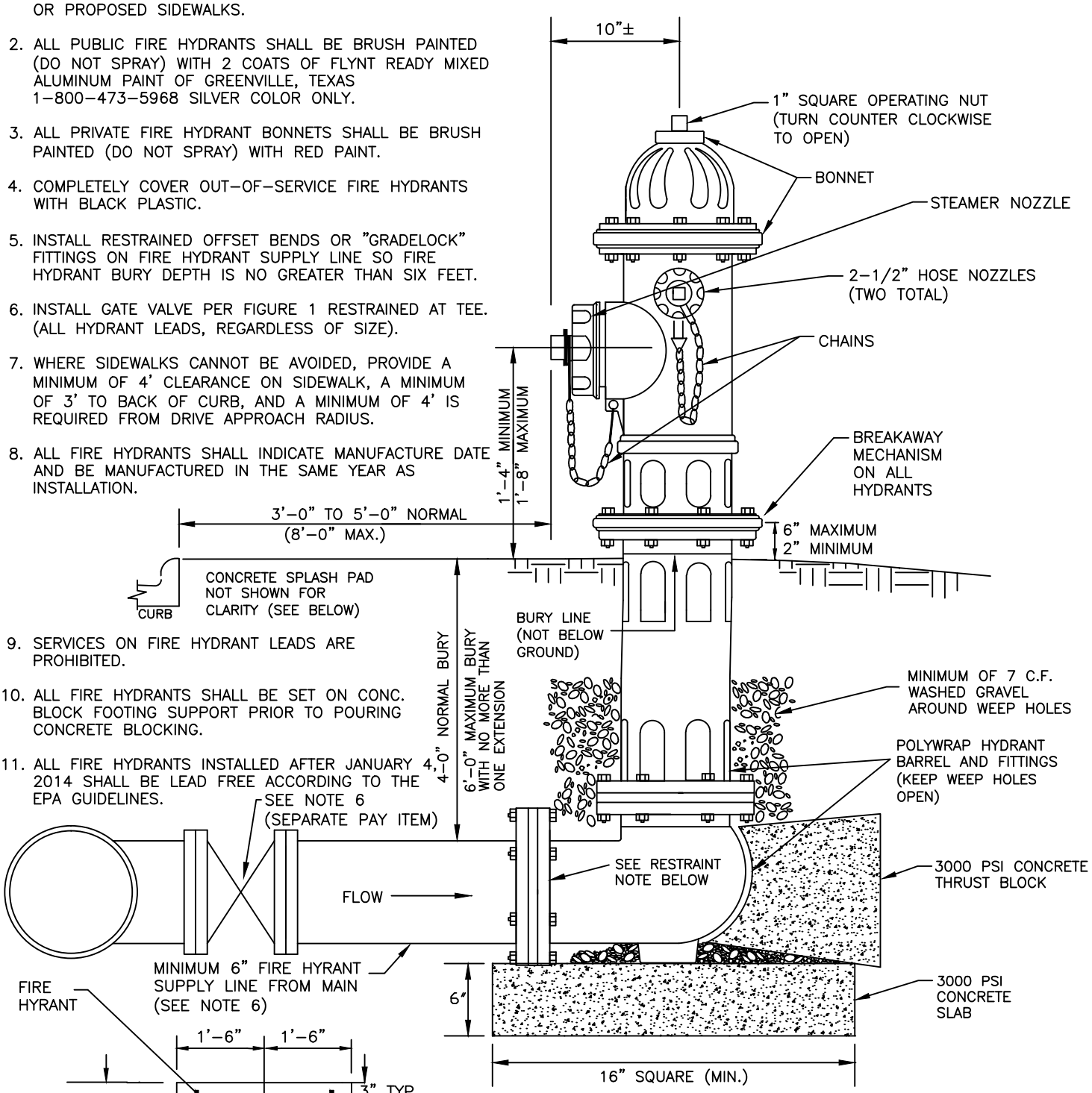


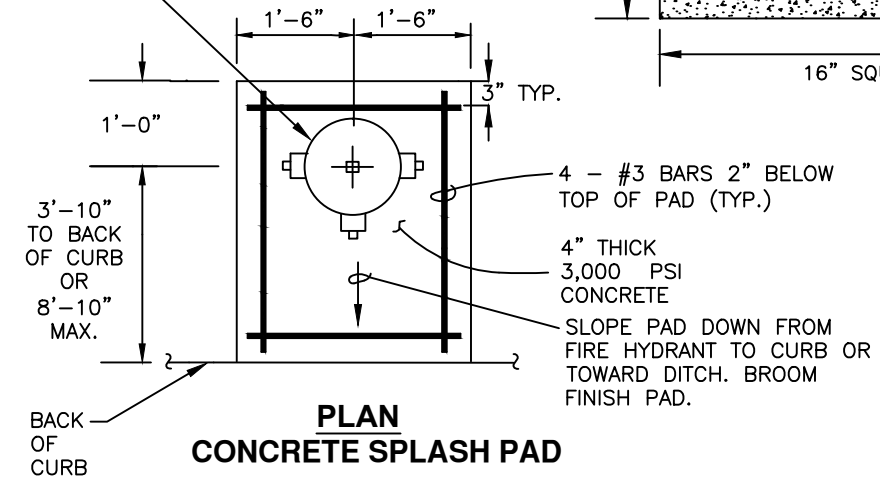


**PLAN**
**CONCRETE SPLASH PAD**

NOTE: ALL CONNECTIONS BETWEEN FIRE HYDRANT VALVE AND MAIN SHALL BE FLANGED OR MJ RESTRAINED AS FOLLOWS:

1. SPECIAL MJ ANCHORING FITTINGS
2. "GRADELOCK" ANCHOR FITTINGS
3. RETAINER GLANDS WITH MJ BELL FITTINGS
4. SWIVEL SOLID ADAPTER ON CONCRETE CYLINDER PIPE FLANGED OUTLET

REV: 06/18/2015

FIGURE 2
FIRE HYDRANT AND CONCRETE SPLASH PAD
ARLINGTON WATER UTILITIES